BALDOR® • RELIANCE

Product Information Packet

CFSWDNM3555-E

2HP,3480RPM,3PH,60HZ,56C,3546M,TENV,F1,N

Copyright © All product information within this document is subject to ABB Motors and Mechanical Inc. copyright © protection, unless otherwise noted.

Part Detail

Revision:	E	**Status:**	PRD/A	**Change #:**		**Proprietary:**	No
Type:	AC	**Elec. Spec:**	35WGL288	**CD Diagram:**	CD0005	**Mfg Plant:**	
Mech. Spec:	35E4735	**Layout:**	35LYE4735	**Poles:**	02	**Created Date:**	07-18-2017
Base:	RG	**Eff. Date:**	08-26-2019	**Leads:**	9#18 15" lead length,0#0 dbl dip & bake,0#0 phase insulaY		

Specs

Catalog Number:	CFSWDNM3555-E	**KVA Code:**	N
Enclosure:	TENV	**Lifting Lugs:**	No Lifting Lugs
Frame:	56C	**Locked Bearing Indicator:**	Locked Bearing
Frame Material:	Stainless Steel	**Motor Finish:**	UNPAINTED
Output @ Frequency:	2.000 HP @ 60 HZ	**Motor Lead Quantity/Wire Size:**	@ 0 AWG
Synchronous Speed @ Frequency:	3600 RPM @ 60 HZ		9 @ 18 AWG
Voltage @ Frequency:	230.0 V @ 60 HZ	**Motor Lead Exit:**	Ko Box
	460.0 V @ 60 HZ	**Motor Lead Termination:**	Flying Leads
XP Class and Group:	None	**Motor Type:**	3546M
XP Division:	Not Applicable	**Mounting Arrangement:**	F1
Agency Approvals:	UR	**Power Factor:**	89
	CSA	**Product Family:**	WD All SS Encapsulated
Auxillary Box:	No Auxillary Box	**Pulley End Bearing Type:**	Sealed Bearing
Auxillary Box Lead Termination:	None	**Pulley Face Code:**	C-Face
Base Indicator:	Rigid	**Pulley Shaft Indicator:**	Standard
Bearing Grease Type:	Polyrex EM (-20F +300F)	**Rodent Screen:**	None
Blower:	None	**RoHS Status:**	ROHS COMPLIANT
Current @ Voltage:	2.400 A @ 460.0 V	**Shaft Extension Location:**	Pulley End

	4.800 A @ 230.0 V	**Shaft Ground Indicator:**	No Shaft Grounding
Design Code:	B	**Shaft Rotation:**	Reversible
Drip Cover:	No Drip Cover	**Shaft Slinger Indicator:**	No Slinger
Duty Rating:	CONT	**Speed Code:**	Single Speed
Electrically Isolated Bearing:	Not Electrically Isolated	**Motor Standards:**	NEMA
Feedback Device:	NO FEEDBACK	**Starting Method:**	Direct on line
Front Face Code:	Standard	**Thermal Device - Bearing:**	None
Front Shaft Indicator:	None	**Thermal Device - Winding:**	None
Heater Indicator:	No Heater	**Vibration Sensor Indicator:**	No Vibration Sensor
Insulation Class:	H	**Winding Thermal 1:**	None
Inverter Code:	Not Inverter	**Winding Thermal 2:**	None

Nameplate NP1953A01

CAT.NO.	CFSWDNM3555-E						
SPEC.	35E4735L288G1						
HP	2						
VOLTS	230/460						
AMP	4.8/2.4						
RPM	3480						
FRAME	56C	HZ	60			PH	3
SER.F.	1.15	CODE	N	DES	B	CLASS	H
NEMA-NOM-EFF	88.5	PF	89				
RATING	40C AMB-CONT						
CC	010A	USABLE AT 208V					
DE	6205	ODE	6205				
ENCL	TENV	SN					
	4:1CT, 10:1VT						

Parts List

Part Number	Description	Quantity
SA346303	SA 35E4735L288G1	1.000 EA
RA334813	RA 35E4735L288G1	1.000 EA
35CB1012A02	35 MACH MID SECTION - 3 PC. CONDUIT BOX	1.000 EA
10XN1032FS08	HEX HD CAP SCREW 10-32 X 1/2 SS FOOD SAF	3.000 EA
11XW1032G08	10-32 X .50, TAPTITE II, HEX WSHR SLTD U	1.000 EA
HW3001B02	BRASS CUP WASHER W/GROUND SYMBOL TAB,	1.000 EA
35EP1940A03	FRONT TENV 205 BRG (STAINLESS)	1.000 EA
RM1070A25	O-RING, VITON/FKM .070CS X 6.190ID	1.000 EA
HA4054	SHORT T-DRAIN FITTING, .125" N.P.T.	1.000 EA
HW4500S33	1/8 NPT STAINLESS #304 SS PLUG	3.000 EA
HW5100A05	WVY WSHR F/205 & 304 BRGS	1.000 EA
35EP1935A02	PULLEY 56C/143-5TC ENCL 205 BRG	1.000 EA
RM1070A25	O-RING, VITON/FKM .070CS X 6.190ID	1.000 EA
HW4600G01	.984X1.499X.25 VITON SLICK SERIES LIP	1.000 EA
HW4600E99	25 X 42 X 6 AFX SEAL, GRAPHITE INFUSED V	1.000 EA
HW4500S33	1/8 NPT STAINLESS #304 SS PLUG	3.000 EA
HA4054	SHORT T-DRAIN FITTING, .125" N.P.T.	1.000 EA
RM1070A26	O-RING,4.5MM I.D.X1.5MM C.S. (VITON)	4.000 EA
RM1070A81	O-RING, -043 VITON/FKM .070CS X 3.489ID	1.000 EA
35CB1511A01	35-36-37 MACH. LID - 3 PC. CONDUIT BOX	1.000 EA
RM1070A81	O-RING, -043 VITON/FKM .070CS X 3.489ID	1.000 EA
HW2502D13	SS KEY, 3/16 SQ X 1.375	1.000 EA
HA7000A04	KEY RETAINER 0.625 DIA SHAFTS	1.000 EA
MJ5001A27	32220KN GRAY SEALER *MIN BUY 4 QTS=1GAL	0.005 QT

Parts List (continued)

Part Number	Description	Quantity
MJ5004A93	FOOD GRADE (H1 RATED) ANTISEIZE THRD COM	0.005 EA
MJ1000A02	GREASE, MOBIL POLYREX EM - 124047	0.050 LB
WD5603A01	KIT, CLOSED-END LEAD SPLICE (18-14GA)	1.000 EA
HA3100FS61	THRUBOLT, 10-32 X 11.750 SS FOOD SAFE	4.000 EA
36PA1000	PKG GRP, PRINT PK1016A06	1.000 EA
MN416A01	TAG-INSTAL-MAINT no wire (1200/bx) 3/19	1.000 EA
HA5027A07	85XU1208S08 FACE DRAIN PINS BAGGED	1.000 EA
FE-0000001	ZRTG FE ASSEMBLY	1.000 EA
PE-0000002	ZRTG PE ASSEMBLY	1.000 EA

No performance data has been assigned to this product.

35LYE4735

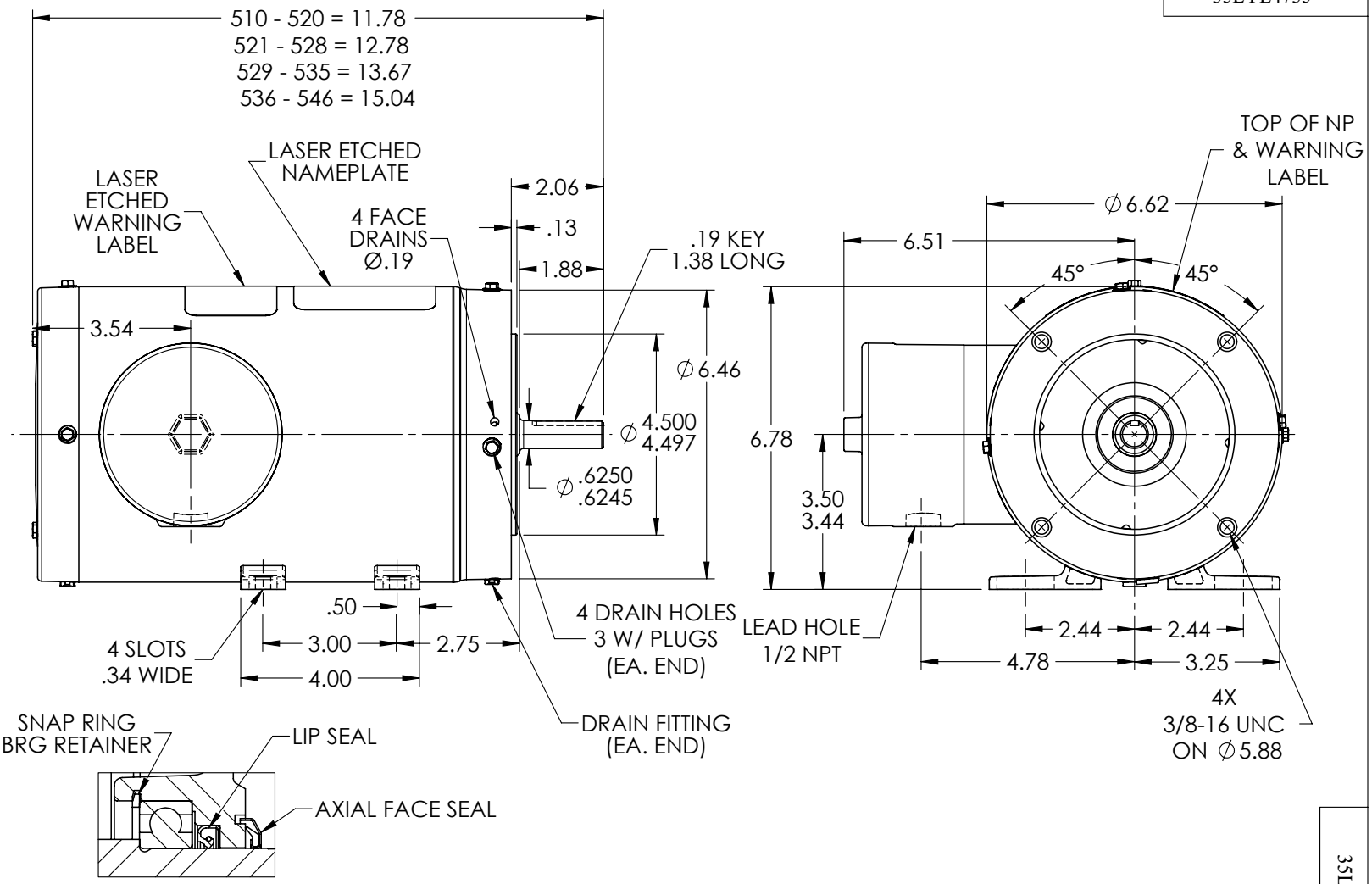

CUSTOMER IS RESPONSIBLE FOR DETERMINING THAT BALDOR'S PRODUCT WILL PERFORM SUITABLY IN THE INTENDED APPLICATION

REV. DESC: 3.50 WAS 3.5			
REV: B	VERSION: 02	REVISED: 06:14:33 04/08/2019	TDR: 000001105091
35LYE4735	MODEL NO. 35LYE4735		REF: -
	BY: ENMARH0		

BALDOR

STD HORZ 56C TENV 35M WD11/12

35LYE4735

CD0005

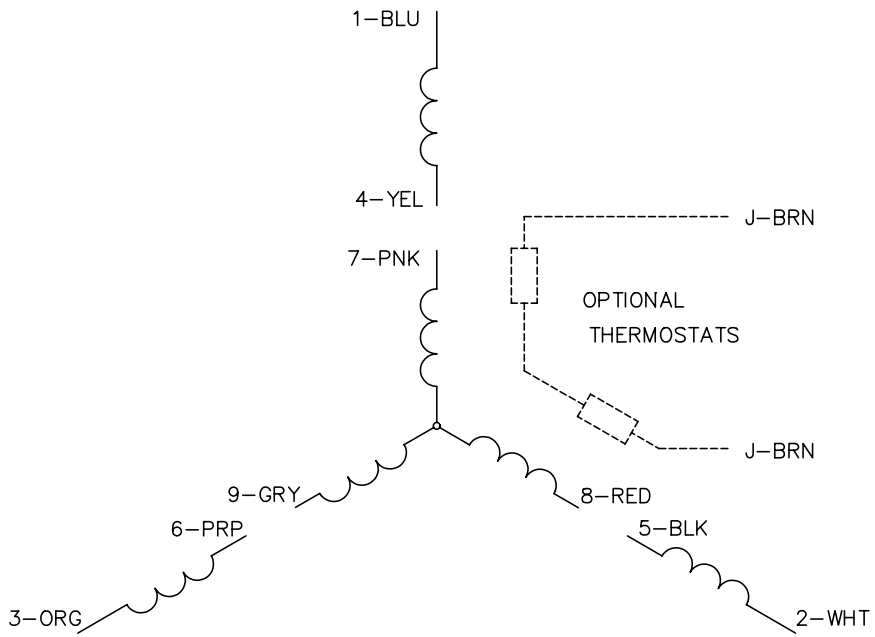

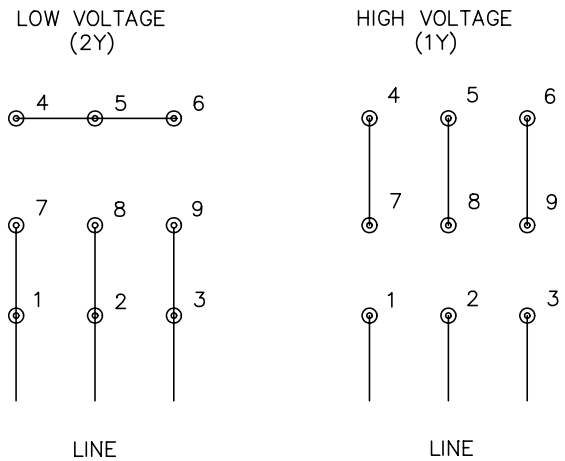

NOTES:

1. INTERCHANGE ANY TWO LINE LEADS TO REVERSE ROTATION.
2. OPTIONAL THERMOSTATS ARE PROVIDED WHEN SPECIFIED.
3. ACTUAL NUMBER OF INTERNAL PARALLEL CIRCUITS MAY BE A MULTIPLE OF THOSE SHOWN ABOVE.
4. LEAD COLORS ARE OPTIONAL. LEADS MUST ALWAYS BE NUMBERED AS SHOWN.

REV. DESC: REVISE TO SHOW OPTIONAL COLORS			
REV. LTR: E	BY: JLP	REVISED: 01/19/99 10:15	TDR: 0171435
CD0005		FILE: AAA00005140	MDL: –
		MTL: –	

BALDOR ELECTRIC Co.

3PH, DV, 9 LEADS

CD0005